Relays

SID4 Series

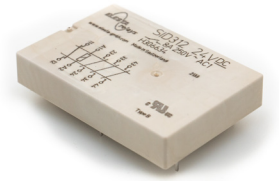

Features

- Relay with forcibly guided contacts according to IEC 61810-3, Application type A
- Protective separation (see insulation data)
- Suitable for print mounting
  - With solder connections
  - With ELO pins for press-fit technology
- Double armature relay with 2 contacts in series per path
- Dual-channel capability with only one relay possible
- SMD placement under the relay possible
- Height only 10,9 mm
- Contact assembly SID312/SID314: 3 NO + 1 NC

Dimensions

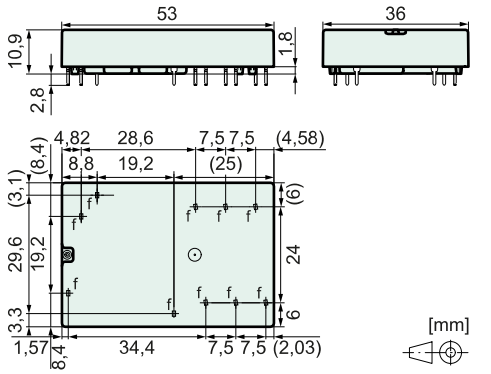

Pin dimension f	0,7 x 0,6 mm
Recomm. drilling on PCB for solder connections	Ø 1,2 mm
Recomm. drilling on PCB* for ELO pins	Ø 1,0 mm + 0,09 / - 0,06 mm

* with HAL surface, for other surfaces on request

Coil data at 20 °C

Nominal power (typ.)	0,82 W
Holding power (typ.)	0,25 W
Coil limit temperature	120 °C

Nominal voltage (VDC)	Min. Pick-up voltage (VDC)	Min. Drop-out voltage (VDC)	Nominal current (mA)	Resistance (Ohm)
5,0	3,5	0,5	161	31 (1 ± 10 %)
12,0	8,4	1,2	69	173 (1 ± 10 %)
18,0	12,6	1,8	46	396 (1 ± 10 %)
24,0	16,8	2,4	33	736 (1 ± 10 %)
48,0	33,6	4,8	16	2990 (1 ± 10 %)
60,0	42,0	6,0	13	4570 (1 ± 10 %)
110,0	77,0	11,0	8	14660 (1 ± 10 %)

Excitation voltage range

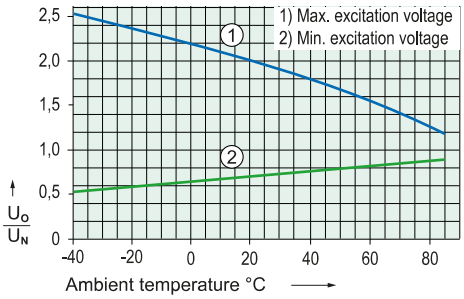

Test conditions:
- Graph 1: Contact current 5 A MAX
- Graph 2: without previous operation
- Free-standing relay on PCB
- Duty cycle 100%

Contact data

Contact material	$AgSnO_2$ + 0,2, ..., 0,4 µm Au
Type of contact	Single contact with notched crown
Rated switching power 250 V / 8 A / AC-1 (max.)	2000 VA
Electr. life time (0,1 Hz, rel. duty cycle 10%)	100000
Inrush current	30 A for 20 ms
Switching voltage range	5, ..., 250 V DC / AC
Switching current range*	3 mA, ..., 8 A
Switching power range*	40 mW, ..., 2000 W (VA)
Contact resistance as new (max.)	100 mΩ
Short circuit resistance of NO contacts** with pre-fuse	1000 A SCPD 10 A gG / gL (fuse)
Short circuit resistance of NC contacts** with pre-fuse	1000 A SCPD 6 A gG / gL (fuse)

* Reference values ** Prospective short-circuit current

Electrical life (NO contacts)

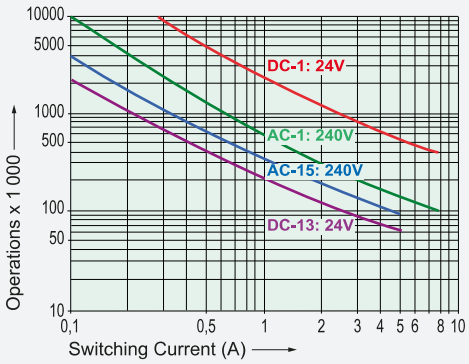

Switching capacity (IEC 61810-1)	
AC-1:	240 V / 8 A MAX
AC-15:	240 V / 5 A MAX
DC-1:	24 V / 8 A MAX
DC-13:	24 V / 5 A / 0,1 Hz MAX L/R = 40ms
Switching capacity (UL 508)	B300, R300
Continuous current per contact at load of:	
1 or 2 contacts	8 A MAX
3 contacts	6 A MAX

Contact load limit curve (DC)

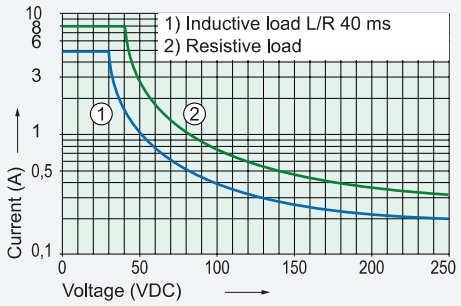

Circuit diagram (top view)

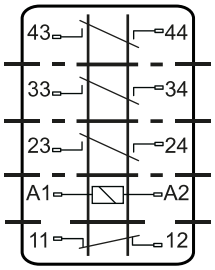

SID312/SID314

Insulation data

Rated insulation voltage (IEC 60664-1)	250 VAC
Basic insulation	
- Air and creepage distance (min.)	4 mm
- Test voltage	2500 V_{rms} / 1 min
Double or reinforced insulation	
- Air and creepage distance (min.)	5,5 mm
- Test voltage	4000 V_{rms} / 1 min
Open contact: Test voltage*	1500 V_{rms} / 1 min
Creepage resistance	CTI 250
Pollution degree	2
Overvoltage category	III
Insulation resistance (min.)	100 MΩ
- Test voltage	500 VDC

* Initial value

Mechanical data

Mechanical lifetime (min.)	10 x 10^6 operations
Switching frequency (max.)	8 Hz
Response time (NO closed) (typ.)	20 ms
Drop-out time (NC closed) (typ.)*	5 ms
Bounce time (typ.)	NO: 2 ms / NC: 20 ms
Shock resistance (16 ms) (min.)	NO: 15g / NC: 5g
Vibr. resistance (10-200 Hz) (min.)	NO: 10g / NC: 1,5g
Weight	approx. 33,6 g
Mounting position	any
Mounting distance (min.)	5 mm

* without coil wiring

Other data

Ambient temperature	-40 °C, ..., +85 °C
Thermal resistance	40 K / W
Protection class	RT II
Solder bath temperature	270 °C / 5 s
Test method (heating)	A (group assembly)
Approvals	cULus, TÜV
Flammability class	UL 94 V-0
UL File	E188953 Sec. 6

Options, Accessories

Other coil designs	possible
Connection technologies	Solder connections, ELO pins

Product key

SID 3 1 2 24VDC XX

SID	Type designation	
3	Number of contacts NO	
1	Number of contacts NC	
2	Connection technology	2 = Solder connections, 4 = ELO pins
24VDC	Nominal coil voltage	
XX	Options	

ELESTA GmbH, Heuteilstrasse 18,
CH - 7310 Bad Ragaz, Switzerland

Phone: +41 81 303 54 00
Worldwide: www.elesta-gmbh.com

© Copyright
11/2021